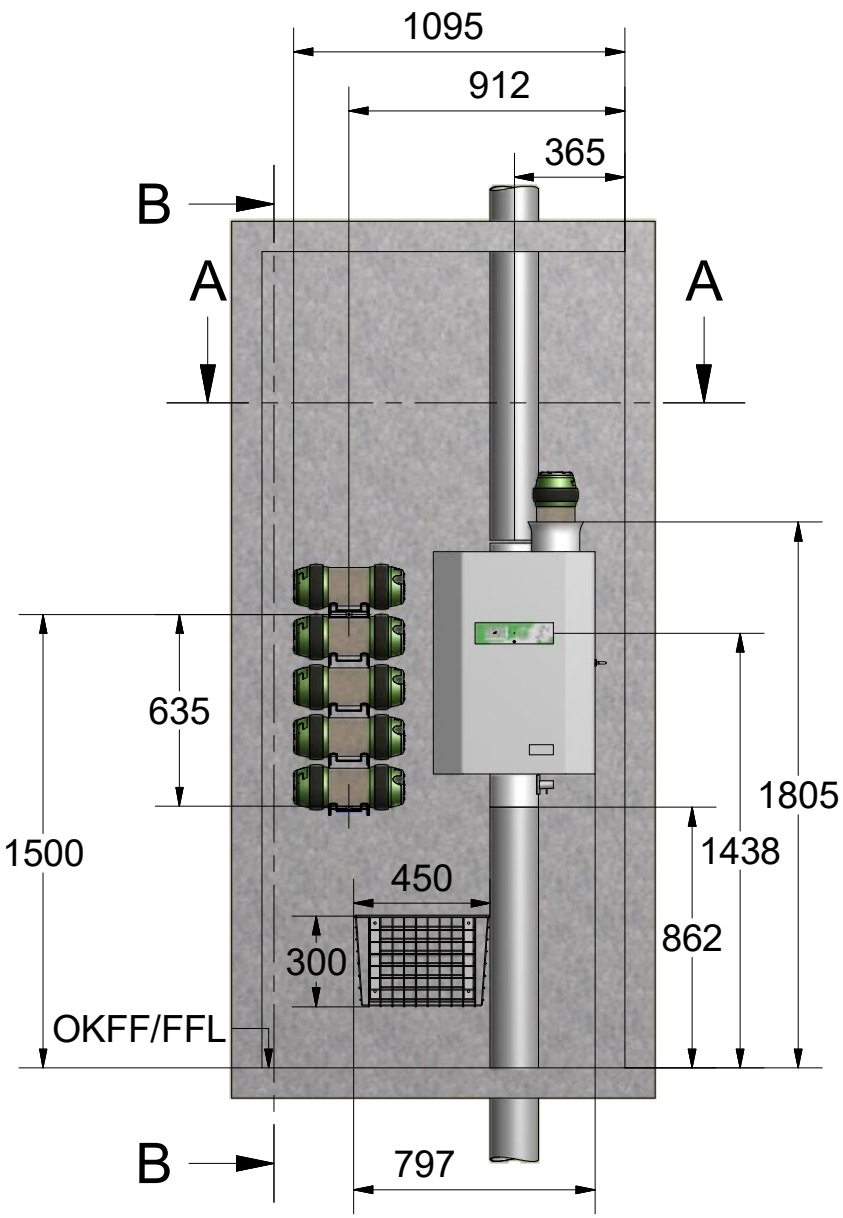

B-B (1 : 25)

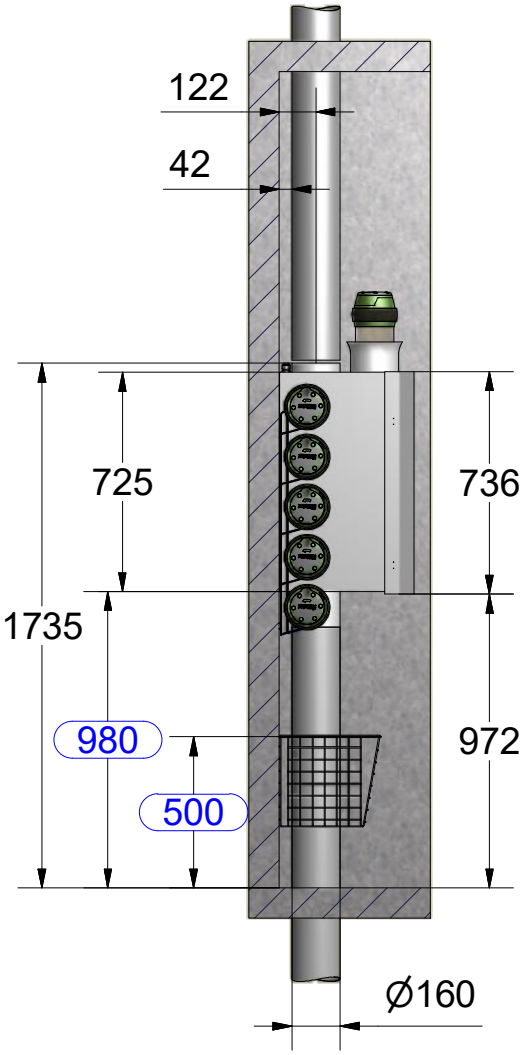

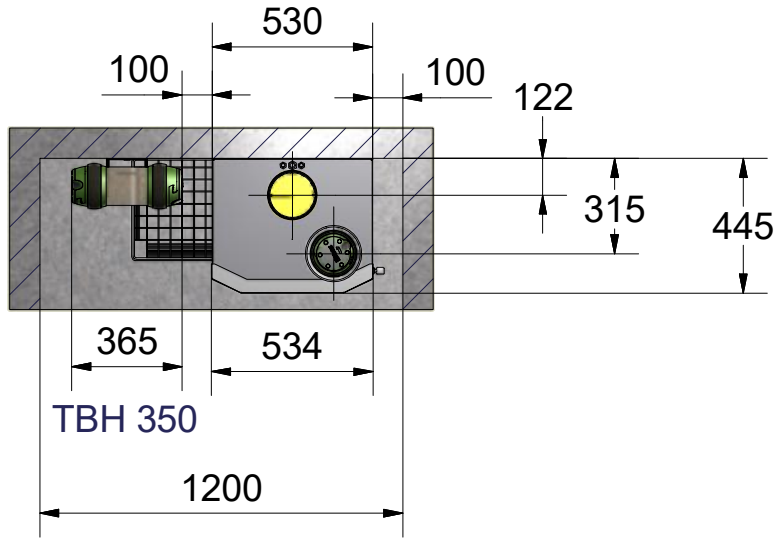

A-A (1 : 25)

HÖRTIG rohrpost
Air Tube Transport Systems

APL 472T

Station with small basket

1 / 1

22.10.2020