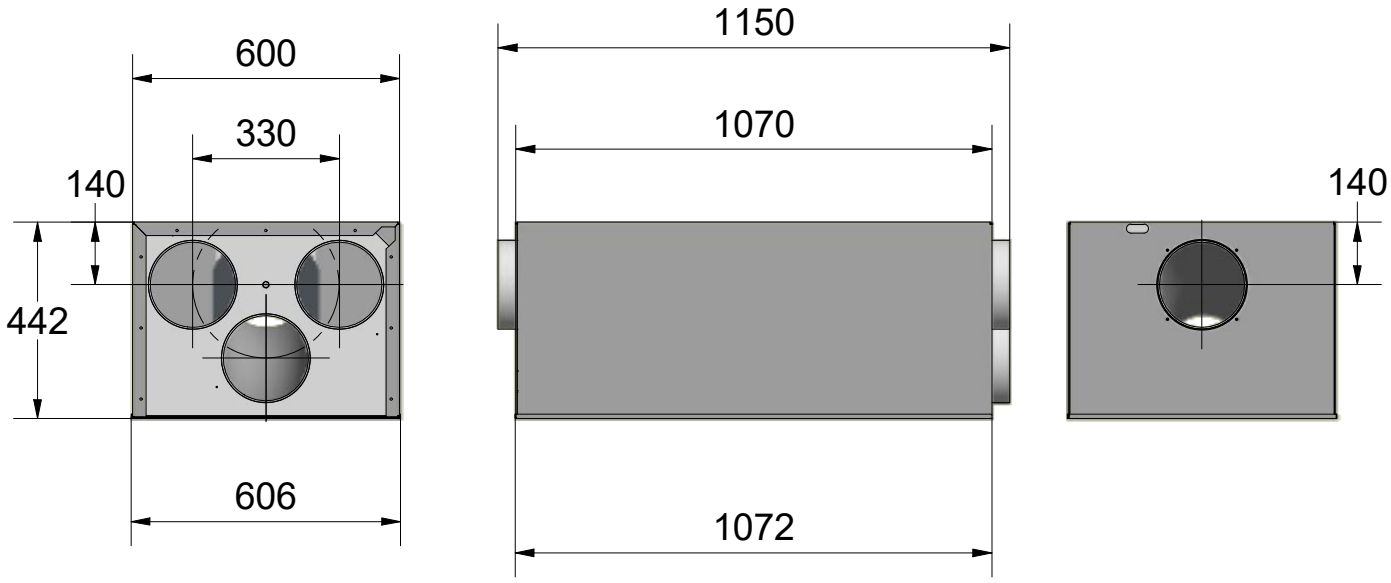

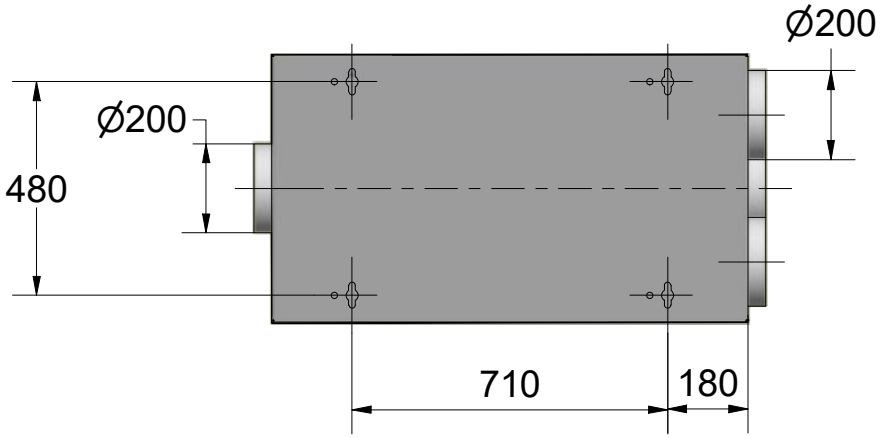

HÖRTIG rohrpost®
Air Tube Transport Systems

Application drawing 10395V0E/0F Diverter

18.03.2021